CNH INDUSTRIAL 1090.010.110X CDX 66 C

IVECO

MARELLI BENDIX	**ACX 66 C – ACX 66 CG**	
FIAT IVECO	**8018324**	

Bore	70	mm	Max speed	3000	‘/min	0 Air in	Fl. D. 18.5	2 Air out	M24 X 1.5
Stroke	50	mm	Max Pressure	8	bar	8.1 Oil in	M10 X 1.25	8.2 Oil out	Base
Displacement	192	CC	Weight	9.5	Kg	9.1 Water in	M16 X 1.5	9.2 Water out	M16 X 1.5

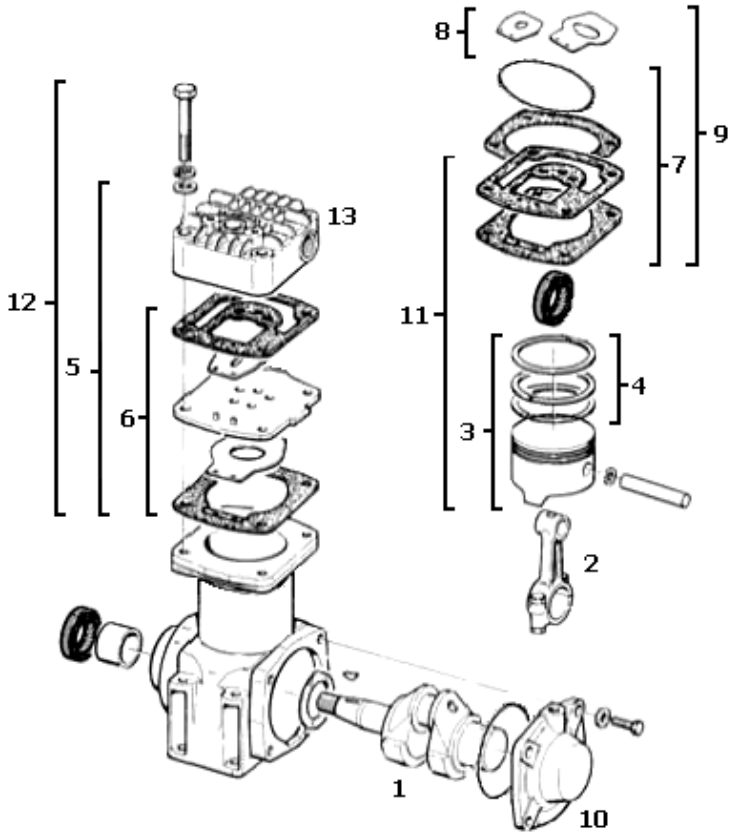

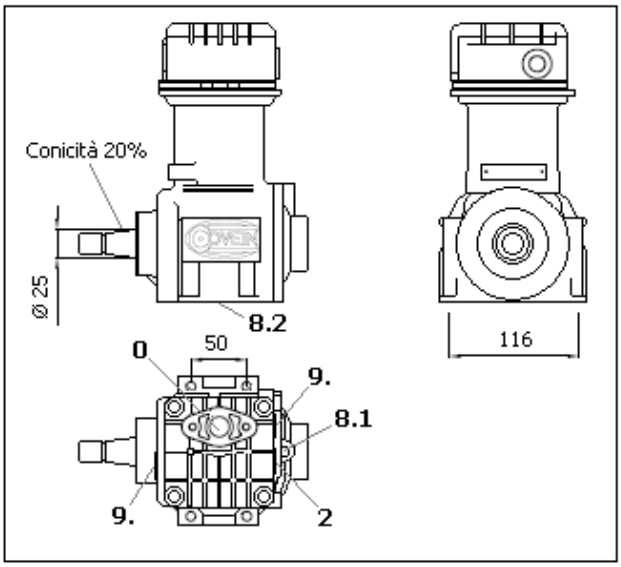

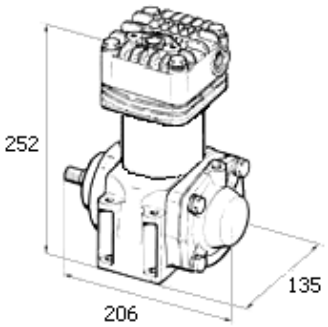

Item	Code	Descrizione	Description
1	1080.010.003	Albero	Crankshaft
2	1080.010.030	Biella	Connecting Rod
3	1080.010.070	Kit Pistone D. 70.0 (Segm. 2-2-3)	Piston Set D. 70.0 (Ring Set 2-2-3)
3	1080.010.011	Kit Pistone D. 70.5 (Segm. 2-2-4)	Piston Set D. 70.5 (Ring Set 2-2-4)
3	1100.010.011	Kit Pistone D. 71.0 (Segm. 2-2-4)	Piston Set D. 71.0 (Ring Set 2-2-4)
4	1080.010.012	Kit Segmenti D. 70.0 (2-2-4)	Piston Ring Set D. 70.0 (2-2-4)
4	1080.010.013	Kit Segmenti D. 70.5 (2-2-4)	Piston Ring Set D. 70.5 (2-2-4)
5	1080.010.016	Kit Testa	Head Kit
6	1080.010.015	Kit Piastra	Plate & Valve Kit
7	1080.010.017	Kit Guarnizioni	Gasket Kit
8	1080.010.014	Kit Valvole	Valve Kit
9	1080.010.027	Kit Guarnizioni e Valvole	Gasket & Valve Kit
10	1080.010.052	Supporto	Support
11	1100.010.170	Kit riparazione	Repair kit
12	1100.010.116	Kit Testa Ev.	Head Kit Evolution
13	1080.010.002	Testa Compressore	Head

Le immagini rappresentate hanno valore puramente indicativo. All the images shown should be considered as purely indicative.