RENAULT 7600.065.200 CD 719

RENAULT PREMIUM / MAGNUM / MIDLUM / KERAX IRISBUS AGORA' – RENAULT BUS

KNORR BREMSE	**LP 4851**	
RENAULT	**50.10.339.859**	

Bore	78	mm	Max speed	3000	'/min	0 Air in	M26 X 1.5	2 Air out	M26 X 1.5
Stroke	52	mm	Pressione max	11	bar	8.1 Oil in	Flange	8.2 Oil out	Flange
Displacement	500	CC	Weight	12.8	Kg	9.1 Water in	M18 X 1.5	9.2 Water out	M18 X 1.5

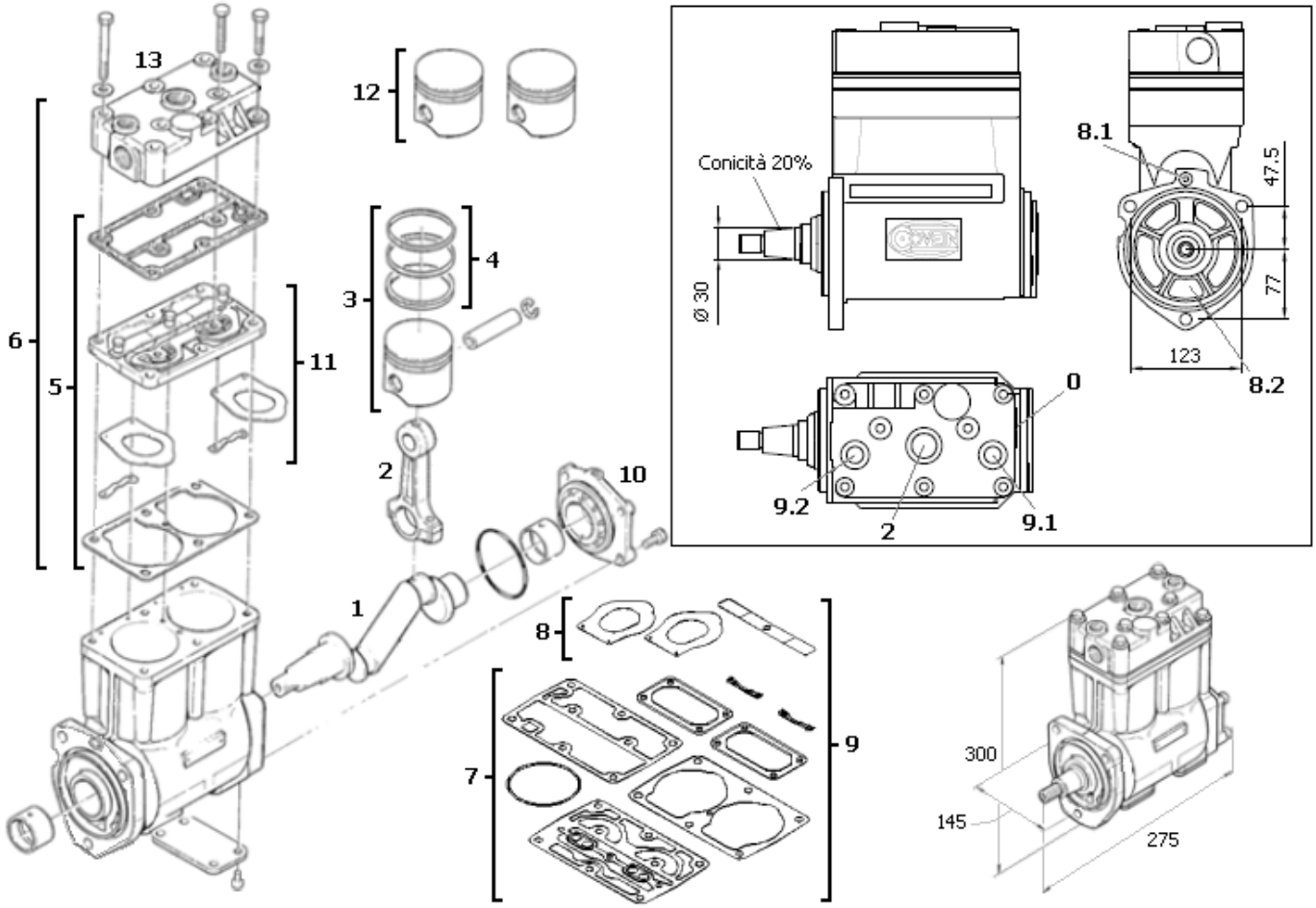

Item	Code	Descrizione	Description
1	7600.065.005	Albero	Crankshaft
2	7600.065.006	Biella	Connecting Rod
3	7200.065.008	Kit Pistone D. 78.0 (Segm. 2.5-2.5-4)	Piston Set D. 78.0 (Ring 2.5-2.5-4)
3	7200.065.009	Kit Pistone D. 78.5(Segm. 2.5-2.5-4)	Piston Set D. 78.5 (Ring 2.5-2.5-4)
4	7200.065.011	Kit Segmenti D. 78.0 (2.5-2.5-4)	Piston Ring Set D. 78.0 (2.5-2.5-4)
4	7200.065.012	Kit Segmenti D. 78.5 (2.5-2.5-4)	Piston Ring Set D. 78.5 (2.5-2.5-4)
5	7600.065.150	Kit Piastra	Plate & Valve Kit
6	7600.065.155	Kit Testa	Head Kit
7	7600.065.052	Kit Guarnizioni	Gasket Kit
8	4300.055.053	Kit Valvole	Valve Kit
9	7600.065.051	Kit Guarnizioni e Valvole	Gasket & Valve Kit
10	7600.065.007	Supporto	Support
11	7600.065.173	Kit Piastra Light	Plate & Valve Kit Light
12	7200.065.088	Kit Coppia Pistoni D. 78.0	Double Pistons Set D. 78.0
12	7200.065.089	Kit Coppia Pistoni D. 78.5	Double Pistons Set D. 78.5
13	7600.065.002	Testa Compressore	Head Compressor

Le immagini rappresentate hanno valore puramente indicativo. All the images shown should be considered as purely indicative.